FLEXFORM



SVEVA *CARLO COLOMBO* **2018**

ARMCHAIRS

FLEXFORM Spa
Via Einaudi 23/25 20821 Meda (MB) Italy | Tel. +39 0362 3991 | info@flexform.it | www.flexform.it

SVEVA | *CARLO COLOMBO* | **2018**

SVEVA LIGHT
Structure in rigid molded polyurethane with glossy lacquer finish in these colors: white 4570, terracotta 4580, forest green 4565, aquamarine 4560 and black 4550
Swivel base 4/5 spokes with 360-degree swivel; in cast aluminum with satin, chrome, black chrome, burnished, matt titanium 710 or glossy anthracite finish; the ottoman has a stationary base with 4 spokes. Feet rest on tips made of thermoplastic material
Armchair cushions in sterilized goose down (Assopiuma certified, gold label) with insert in crushproof material
Ottoman cushion in sterilized goose down (Assopiuma certified, gold label)
Seat/backrest/ottoman cushion upholstery is removable in both the fabric and leather versions

SVEVA SOFT
Frame padded with patented material including various combinations of patented material
Seat cushion in sterilized goose down (assopiuma certified, Gold Label) with insert in crushproof material
Base with swivel system, in cast aluminum with satin, chrome, black chrome, burnished, matt titanium 710 or glossy anthracite finish. Rests on pads made of thermoplastic material
Upholstery is removable in both the fabric and leather versions

ARMCHAIR
Frame in rigid polyurethane upholstered in cowhide in the following colors: grey 5003, dark brown 5004, extra dark brown 5013, black 5005, olive 5006, sand 5001, tobacco 5015, linen 5019, mole 5020, chestnut 5021, dark brown suede 6004, black suede 6005, olive suede 6003, sand suede 6001.
Seat / backrest cushions in sterilized goose down (assopiuma certified, Gold Label) with insert in crushproof material
Base with swivel system, in cast aluminum with satin, chrome, black chrome, burnished, matt titanium 710 or glossy anthracite finish. Rests on pads made of thermoplastic material
Cushion upholstery is removable in both the fabric and leather versions

Flexform reserves the right to make, at any time and without notice, improvements or modifications that it might deem appropriate to its products, whether these be of an aesthetic or technical nature or related to sizes and materials.

COD. 024841 LIGHT-ARMCHAIR SWIVEL BASE W/ 4 SPOKES

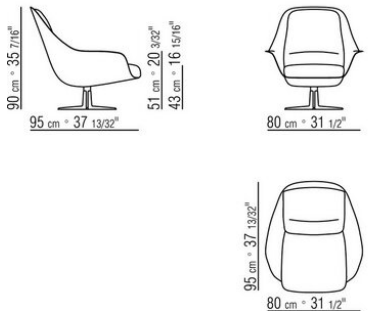

COD. 024842 LIGHT-ARMCHAIR SWIVEL BASE W/ 5 SPOKES

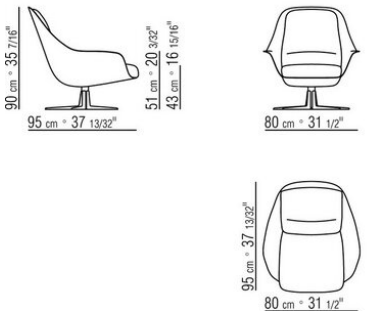

COD. 024865 LIGHT-OTTOMAN

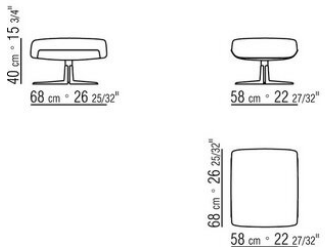

COD. 024831 SOFT-ARMCHAIR SWIVEL BASE W/ 4 SPOKES

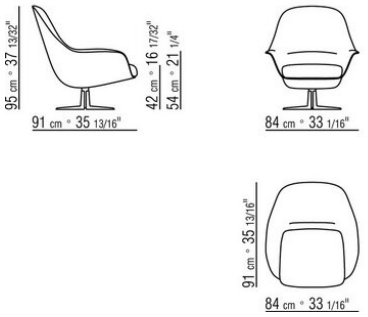

COD. 024811 SOFT-BERGERE SWIVEL BASE W/ 4 SPOKES

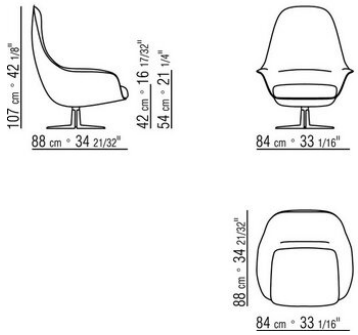

COD. 024832 SOFT-ARMCHAIR SWIVEL BASE W/ 5 SPOKES

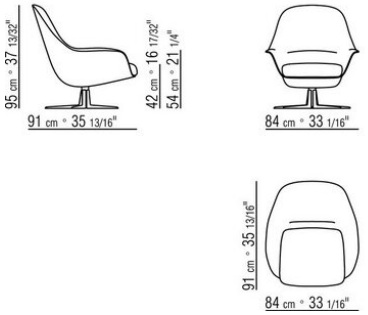

COD. 024812 SOFT-BERGERE SWIVEL BASE W/ 5 SPOKES

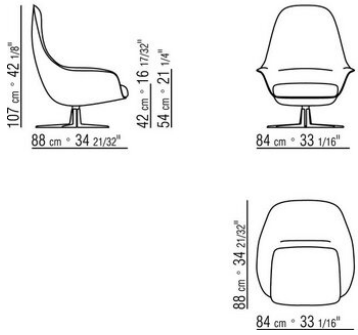

COD. 024860 SOFT-OTTOMAN

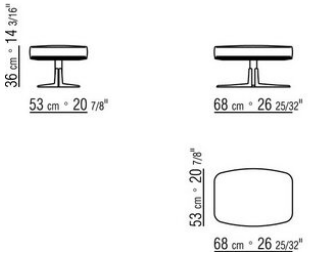

COD. 024821 ARMCHAIR SWIVEL BASE W/ 4 SPOKES

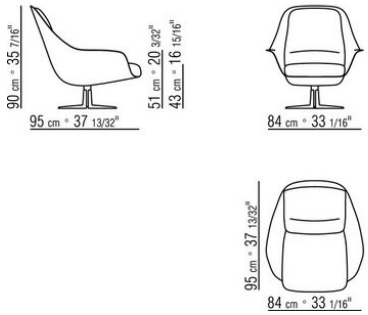

COD. 024822 ARMCHAIR SWIVEL BASE W/ 5 SPOKES

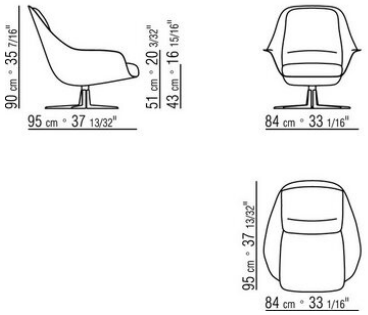

COD. 024850 OTTOMAN

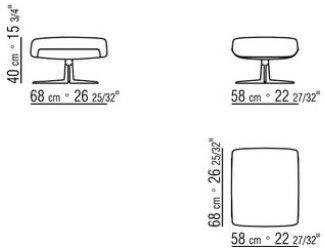

COD. 024899 HEADREST CUSHION

