FLEXFORM



ERI *FUMIE SHIBATA* **2024**

ARMCHAIRS

FLEXFORM Spa
Via Einaudi 23/25 20821 Meda (MB) Italy | Tel. +39 0362 3991 | info@flexform.it | www.flexform.it

ERI | *FUMIE SHIBATA* | **2024**

ARMCHAIR / SWIVEL ARMCHAIR
Armchair shell / swivel armchair in rigid polyurethane laminated to polyurethane foam upholstered in leather or fabric in the following combinations for the inside and outside: entirely in leather (all the leathers in the collection); entirely in fabric; fabric inside and leather outside (all the leathers in the collection)
Armchair seat cushion / swivel armchair in sterilized goose down (Assopiuma certified, Gold label) with insert in crushproof, variable density material covered with a protective laminated fabric
Armchair backrest cushions / swivel armchair in sterilized goose down (Assopiuma certified, Gold label), upon request, with upcharge
Armchair base in turned solid Canaletto walnut with raw-wood effect, natural, or stained walnut extra finish; or in solid ash with natural finish or stained walnut, stained teak, stained wenge, stained brown or stained ebony; or in solid oak with raw-wood effect finish. Frame in metal painted black. With feet in die-cast zama in satin, chrome, black chrome, burnished, glossy anthracite or matt titanium 710 finish. Rests on tips made of thermoplastic material
Swivel armchair base in metal, with satin, chrome, black chrome, burnished, glossy anthracite or matt titanium 710 finish. Central column clad in the same leather or fabric used to clad the outside shell. Rests on feet made of thermoplastic material
Upholstery non-removable in both the fabric and leather versions

Flexform reserves the right to make, at any time and without notice, improvements or modifications that it might deem appropriate to its products, whether these be of an aesthetic or technical nature or related to sizes and materials.

COD. 02C123 ARMCHAIR METAL BASE W/MOV

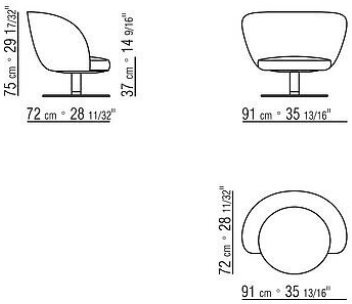

COD. 02C122 ARMCHAIR ASHWOOD

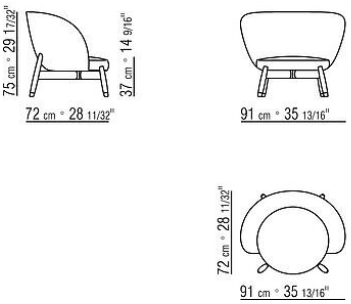

COD. 02C121 ARMCHAIR CANALETTO / OAK

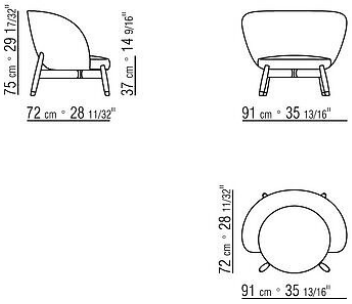

COD. 02C199 CUSHION

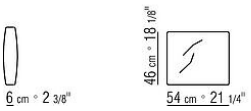

COD. 02C198 PAIR CUSHION

